Work Order ID 72850

Tuesday, August 16, 2011 11:57:06 AM

Item ID: D3564-13 **Accept** **Setup Start** **Stop**

Revision ID:

Item Name: Wearshoe

Start Date: 8/16/2011 **Start Qty:** 12.00 **Cust Item ID:**

Required Date: 8/23/2011 **Req'd Qty:** 12.00 **Customer:**

Reference:

Approvals: **Process Plan:** MK **Date:** 11-08-17 **Tooling:** _____ **Date:** _____ **Run Start** **Stop**

QC: _____ **Date:** _____ **SPC (Y/N):** _____ **Date:** _____

Sequence ID/ Work Center ID	Operation Description	Set Up/ Run Hours	Tool ID	Tool #	Plan Code	Accept Qty	Reject Qty	Reject Number	Insp. Stamp
Draw Nbr / **Revision Nbr**									
D3564 / Rev D									
100	FLOW WATER JET	0.00							
Waterjet	**Memo**	0.00				B 11-8-17			
FLOW CNC Waterjet	1-Cut as per Dwg D3564 ☐Dwg Rev: D ☐Prog Rev: D ☐2-Deburr if necessary								
110	QC2- Inspect parts off machine FAI/FAIB	0.00							
QC	**Memo**	0.00				B 11-8-17			
Quality Control									
120	QC8- Inspect parts - second check	0.00							
QC	**Memo**	0.00							
Quality Control									

12

Unloaded

416

Pro →

Dart Aerospace Ltd

W/O: 72850		WORK ORDER CHANGES					
DATE	STEP	PROCEDURE CHANGE	By	Date	Qty	Approval Chief Eng / Prod Mgr	Approval QC Inspector

Part No: D3569-13 PAR #: N/A Fault Category: ~~Fab~~ Small FAB water Jet NCR: (Yes) No DQA: [illegible] Date: 11.09.08

11.8.26 Resolution: SCRAP Disposition: SCRAP QA: N/C Closed: [illegible] Date: 11/09/08

NCR: ~~72850~~		WORK ORDER NON-CONFORMANCE (NCR) 1.28						
DATE	STEP	Description of NC Section A	Corrective Action Section B: Initial Chief Eng	Action Description Chief Eng	Sign & Date	Verification Section C	Approval Chief Eng	Approval QC Inspector
11/08/18	# 110	Found at inspection that qty of wear plate is scrap. R.C. Part was During water Jettin Process.	[illegible] QSTAR	SCRAP + Destry No Replace.	[illegible] 11-8-18	[illegible] 11/08/18	[illegible] QSTAR	[illegible] 11/08/18

NOTE: Date & initial all entries

H:\FORMS\Quality Assurance\approved QA\NCRWO RevE

Work Order ID 72850

Tuesday, August 16, 2011 11:57:06 AM

Item ID: D3564-13 **Accept** **Setup Start**

Revision ID:

Item Name: Wearshoe **Stop**

Start Date: 8/16/2011 **Start Qty:** 12.00 **Cust Item ID:**

Required Date: 8/23/2011 **Req'd Qty:** 12.00 **Customer:**

Reference:

Approvals: **Process Plan:** _____ **Date:** _____ **Tooling:** _____ **Date:** _____ **Run Start**

QC: _____ **Date:** _____ **SPC (Y/N):** _____ **Date:** _____ **Stop**

Sequence ID/ Work Center ID	Operation Description	Set Up/ Run Hours	Tool ID	Tool #	Plan Code	Accept Qty	Reject Qty	Reject Number	Insp. Stamp
130	NC BRAKE	0.00				11			
Brake NC	**Memo**	0.00							
Brake NC	Deburr if necessary☐Form on Brake as per Dwg D3564 using Jigs DT 8179 SB 11/08/01								
140	QC5- Inspect part completeness to step on W/O	0.00							
QC	**Memo**	0.00							
Quality Control	8 11/09/01					11			
150	Grey Sandtex(Ref:4.3.5.6) per QSI005 4.3	0.00							
Powdercoat	**Memo**	0.00							
Powder Coating	START TIME: 8:40 ☐OVEN TEMPERATURE: 320 01 ☐FINISH TIME: 9:10								

11X Ø M-f 11/09/02

M 117338

Dart Aerospace Ltd

W/O:		WORK ORDER CHANGES					
DATE	STEP	PROCEDURE CHANGE	By	Date	Qty	Approval Chief Eng / Prod Mgr	Approval QC Inspector

Part No: _____ **PAR #:** _____ **Fault Category:** _____ **NCR:** Yes No **DQA:** _____ **Date:** _____

Resolution: _____ **Disposition:** _____ **QA: N/C Closed:** _____ **Date:** _____

NCR:		WORK ORDER NON-CONFORMANCE (NCR)						
DATE	STEP	Description of NC Section A	Corrective Action Section B			Verification Section C	Approval Chief Eng	Approval QC Inspector
			Initial Chief Eng	Action Description Chief Eng	Sign & Date			

NOTE: Date & initial all entries

Work Order ID 72850

Tuesday, August 16, 2011 11:57:06 AM

Item ID: D3564-13 **Accept** **Setup Start**

Revision ID: **Stop**

Item Name: Wearshoe

Start Date: 8/16/2011 **Start Qty:** 12.00 **Cust Item ID:**

Required Date: 8/23/2011 **Req'd Qty:** 12.00 **Customer:**

Reference:

Approvals: **Process Plan:** _____ **Date:** _____ **Tooling:** _____ **Date:** _____ **Run Start**

QC: _____ **Date:** _____ **SPC (Y/N):** _____ **Date:** _____ **Stop**

Sequence ID/ Work Center ID	Operation Description	Set Up/ Run Hours	Tool ID	Tool #	Plan Code	Accept Qty	Reject Qty	Reject Number	Insp. Stamp
160	QC3- Inspect Part Finish	0.00				11	0	M	11/09/02
QC	Memo	0.00							
Quality Control									
170	Identify as per dwg & Stock Location: FP1	0.00				11X	Ø	M	11/09/02
Packaging	Memo	0.00							
Packaging									
180	QC21- Final Inspection - Work Order Release	0.00						11/9/02	
QC	Memo	0.00							
Quality Control									

ME 11-09-02

Dart Aerospace Ltd

W/O:		WORK ORDER CHANGES					
DATE	STEP	PROCEDURE CHANGE	By	Date	Qty	Approval Chief Eng / Prod Mgr	Approval QC Inspector

Part No: _____ **PAR #:** _____ **Fault Category:** _____ **NCR:** Yes No **DQA:** _____ **Date:** _____

Resolution: _____ **Disposition:** _____ **QA: N/C Closed:** _____ **Date:** _____

NCR:		WORK ORDER NON-CONFORMANCE (NCR)						
DATE	STEP	Description of NC Section A	Corrective Action Section B			Verification Section C	Approval Chief Eng	Approval QC Inspector
			Initial Chief Eng	Action Description Chief Eng	Sign & Date			

NOTE: Date & initial all entries

Picklist Print

Tuesday, August 16, 2011 11:57:04 AM

Work Order ID: 72850

Parent Item: D3564-13

Parent Item Name: Wearshoe

Start Date: 8/16/2011 **Required Date:** 8/23/2011

Start Qty: 12.00 **Required Qty:** 12.00

Comments:
IPP Rev:A New Issue 07-03-08 ec
IPP Rev:B As per Rev C 07-07-09 JLM
IPP Rev:C As per Rev D 07-09-09 JLM Verified By:EC
IPP Rev:D Comments revised on Step 5, 6 per B44657 09-02-04 KJ
Verified By:EC

Component Item ID/ Item Name	Replacement Item ID	Mfg/ Purch	Bin Item	Primary Location	Last Location	Route Seq ID	Unit of Measure	Qty on Hand	Qty per Kit	Total Qty	Qty Issued	Date Issued	Status
M304S16GA 304/316 Sheet .063		Purchased	No			100	sf	208.5000	0.222	2.804211 B 11-8-17			

Location		Loc Qty	Loc Code	
MAT020		121.9		
	117653	1.9		
	118578	120		
MAT021		86.6		
	118217	86.6		118217

12

Dart Aerospace Ltd

W/O:		WORK ORDER CHANGES					
DATE	STEP	PROCEDURE CHANGE	By	Date	Qty	Approval Chief Eng / Prod Mgr	Approval QC Inspector

Part No: _____ **PAR #:** _____ **Fault Category:** _____ **NCR:** Yes No **DQA:** _____ **Date:** _____

Resolution: _____ **Disposition:** _____ **QA: N/C Closed:** _____ **Date:** _____

NCR:		WORK ORDER NON-CONFORMANCE (NCR)						
DATE	STEP	Description of NC Section A	Corrective Action Section B			Verification Section C	Approval Chief Eng	Approval QC Inspector
			Initial Chief Eng	Action Description Chief Eng	Sign & Date			

NOTE: Date & initial all entries

DART AEROSPACE LTD	Work Order:	72853
Description: Wearshoe	Part Number:	D3564-13
Inspection Dwg: D3564 **Rev:** D		Page 1 of 1

FIRST ARTICLE INSPECTION CHECKLIST

[X] First Article [ ] Prototype

Drawing Dimension	Tolerance	Actual Dimension	Accept	Reject	Method of Inspection	Comments
7.00	+/-0.030	7.004	✓		V BC2	
2.432	+/-0.010	2.440	✓		V	
3.227	+/-0.010	3.230	✓		V	
3.500	+/-0.010	3.502	✓		V	
0.300 x 0.300	+/-0.010	.293 X .294	✓		V	
Ø0.188	+0.005/-0.001	.188	✓		V	
0.063	+/-0.010	.058	✓		V	

Measured by:	B
Date:	11-8-17

Audited by:	S
Date:	11/08/18

Prototype Approval:	N/A
Date:	N/A

Rev	Date	Change	Revised by	Approved
A	07.04.02	New Issue	KJ/JLM	
B	07.07.18	Dimensions updated per Dwg Rev. C	KJ/JLM	
C	08.02.28	Dwg Rev updated	KJ/DD	

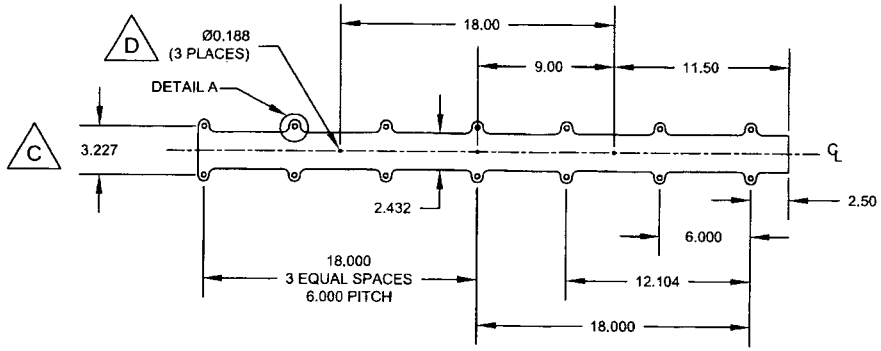

D3564-1F FLAT PATTERN

#72850

RELEASED
07.09.04

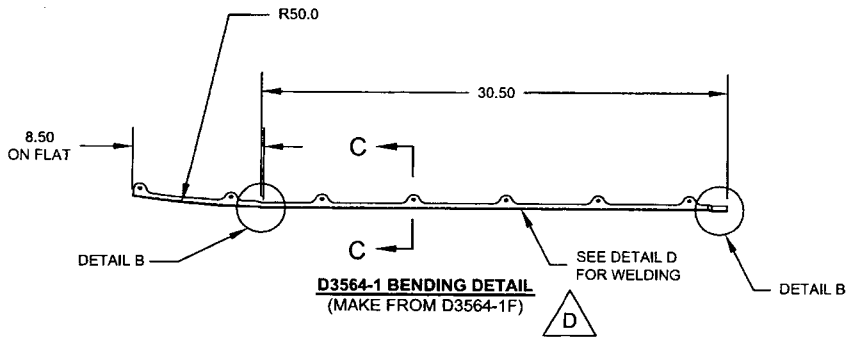

D3564-1 BENDING DETAIL
(MAKE FROM D3564-1F)

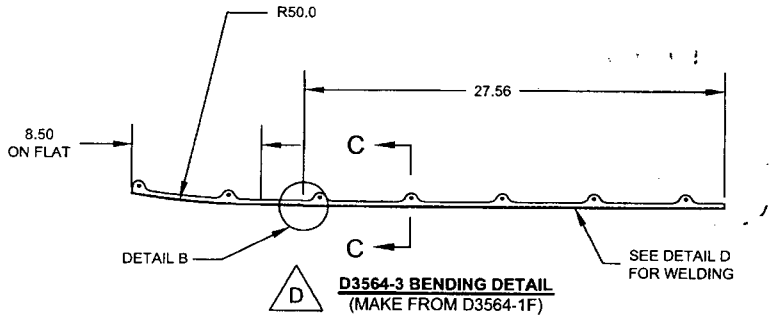

D3564-3 BENDING DETAIL
(MAKE FROM D3564-1F)

REV.	DESCRIPTION	BY	DATE
D	UPDATE DRAWING TEMPLATE; CHANGE ALL (TYP X PLS) TO (X PLACES); PG1 A8: UPDATE NOTES; PG1 A8, PG3 B5,C5: ADD D3564-15; PG1 B6,B3: D3564-1/-3 WAS ONE FIGURE; PG2 A7,A3: D3564-9/-11 WAS ONE FIGURE; PG2 A7,A3: D3564-9/-11 WAS ON PG1; PG3 B8,C8: D3564-13 WAS ON PG2; PG3 D2: WELDING DETAIL WAS ON PG1 PG3 A5,7,B2: RELOCATE DETAILS AND SECTION; PG3 A5,7,B2: INCREASE DETAIL AND SECTION SIZE	CB	07.08.21
C	MOVE TAB OUTBOARD, DETAIL A	PH	07.04.17
B	ADD AMS 5513 AND AMS 5524	PH	07.03.20
A	NEW ISSUE	PH	06.12.18

D3564-1/-3/-5/-7/-9/-11/-13/-15 WEARPLATE NOTES:

1) MATERIAL: AISI 304/316 SS SHEET PER AMS 5513 OR AMS 5524, 16 GAUGE (0.063 THICK)
(REF DART MATERIAL SPEC M304S16GA)
2) FINISH: POWDER COAT GREY SANDTEX (REF 4.3.5.6) PER DART QSI 005 4.3
3) TOLERANCES: PER DART QSI 018 UNLESS OTHERWISE NOTED
4) UNITS: INCHES UNLESS OTHERWISE NOTED
5) BREAK SHARP EDGES: 0.005 TO 0.015 MAX
6) IDENTIFICATION: NONE
7) WEIGHT: SEE TABLE IN ZONE A3
8) WELD PER DART QSI 004
9) SEE PG 3 FOR SECTIONS AND DETAILS
10) PARTS ARE SYMMETRIC ABOUT ℄

WEIGHTS:

D3564-1	1.85 lbs
D3564-3	1.85 lbs
D3564-5	1.93 lbs
D3564-7	1.26 lbs
D3564-9	1.85 lbs
D3564-11	1.85 lbs
D3564-13	0.38 lbs
D3564-15	0.80 lbs

DESIGN	PH	**DART AEROSPACE LTD** HAWKESBURY, ONTARIO, CANADA
DRAWN	CB	
CHECKED	PH	DRAWING NO. D3564 — REV. D — SHEET 1 OF 3
MFG. APPR.		
APPROVED		TITLE: WEARSHOE — SCALE 1:8
DE APPR.		
DATE	07.08.21	

COPYRIGHT © 2006 BY DART AEROSPACE LTD
THIS DOCUMENT IS PRIVATE AND CONFIDENTIAL AND IS SUPPLIED ON THE EXPRESS CONDITION THAT IT IS NOT TO BE USED FOR ANY PURPOSE OR COPIED OR COMMUNICATED TO ANY OTHER PERSON WITHOUT WRITTEN PERMISSION FROM DART AEROSPACE LTD.

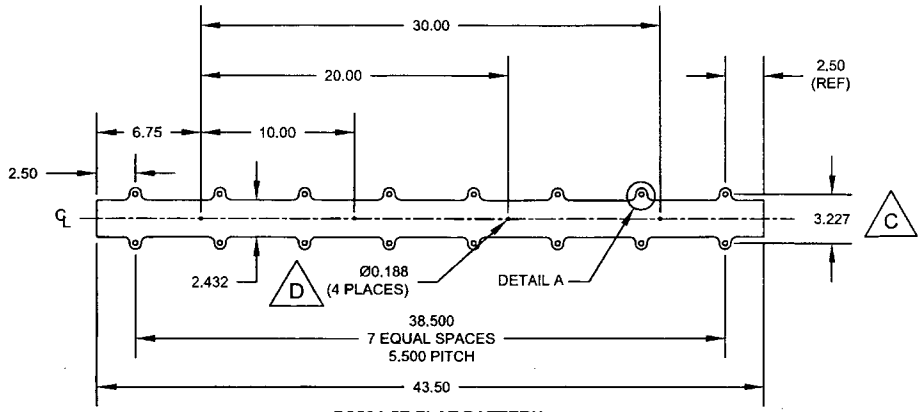

D3564-5F FLAT PATTERN

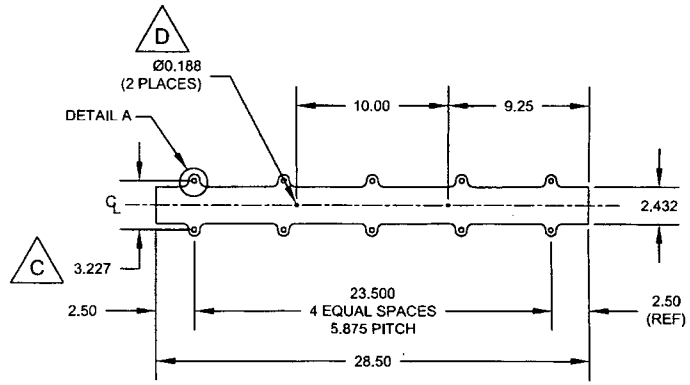

D3564-7F FLAT PATTERN

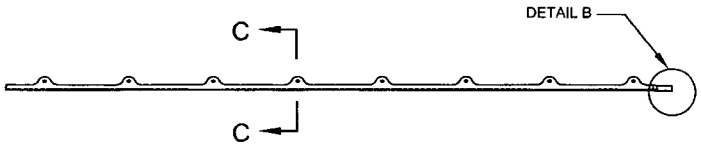

D3564-5 BENDING DETAIL
(MAKE D3564-5 FROM D3564-5F)

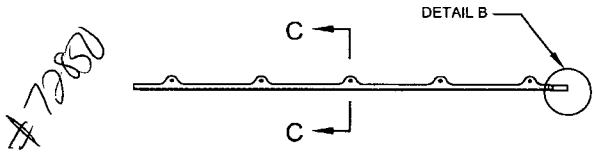

D3564-7 BENDING DETAIL
(MAKE D3564-7 FROM D3564-7F)

RELEASED
07.09.04

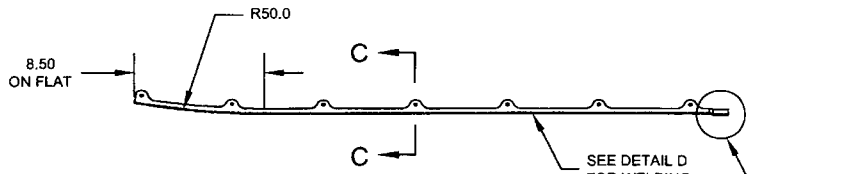

D **D3564-9 BENDING DETAIL**
(MAKE FROM D3564-1F)

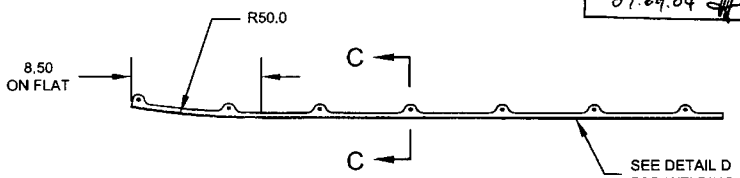

D **D3564-11 BENDING DETAIL**
(MAKE FROM D3564-1F)

DESIGN	PH	**DART AEROSPACE LTD** HAWKESBURY, ONTARIO, CANADA	
DRAWN	CB		
CHECKED	PH	DRAWING NO.	REV. D
MFG. APPR.		D3564	SHEET 2 OF 3
APPROVED		TITLE	SCALE
DE APPR.		WEARSHOE	1:8
DATE	07.08.21		

COPYRIGHT © 2006 BY DART AEROSPACE LTD
THIS DOCUMENT IS PRIVATE AND CONFIDENTIAL AND IS SUPPLIED ON THE EXPRESS CONDITION THAT IT IS NOT TO BE USED FOR ANY PURPOSE OR COPIED OR COMMUNICATED TO ANY OTHER PERSON WITHOUT WRITTEN PERMISSION FROM DART AEROSPACE LTD.

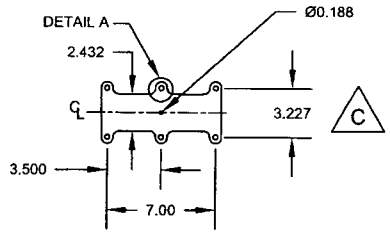

D3564-13F FLAT PATTERN

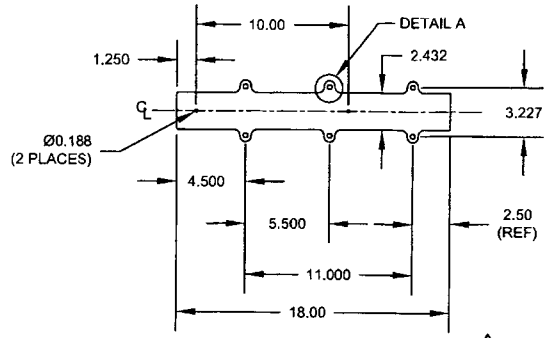

D3564-15F FLAT PATTERN D

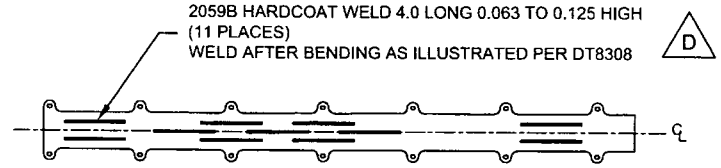

DETAIL D
(D3564-1/-3/-9/-11 WELDING DETAIL)

#7282

RELEASED
07.09.04

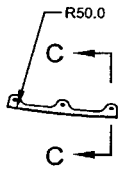

D3564-13 BENDING DETAIL
(MAKE D3564-13 FROM D3564-13F)

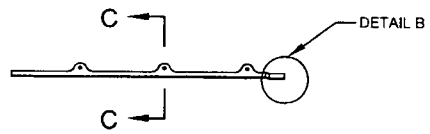

D3564-15 BENDING DETAIL
(MAKE D3564-15 FROM D3564-15F) D

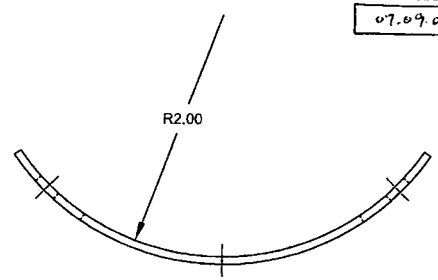

SECTION C-C
SCALE 1:1

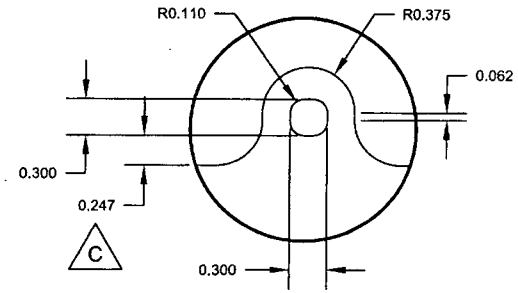

DETAIL A
SCALE 1:1 C

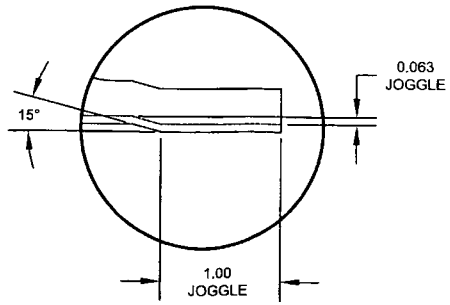

DETAIL B
SCALE 1:1

DESIGN	PH	**DART AEROSPACE LTD** HAWKESBURY, ONTARIO, CANADA
DRAWN	CB	
CHECKED	PH	DRAWING NO. D3564 — REV. D — SHEET 3 OF 3
MFG. APPR.		
APPROVED		TITLE WEARSHOE — SCALE 1:8
DE APPR.	PH	
DATE	07.08.21	

COPYRIGHT © 2006 BY DART AEROSPACE LTD
THIS DOCUMENT IS PRIVATE AND CONFIDENTIAL AND IS SUPPLIED ON THE EXPRESS CONDITION THAT IT IS NOT TO BE USED FOR ANY PURPOSE OR COPIED OR COMMUNICATED TO ANY OTHER PERSON WITHOUT WRITTEN PERMISSION FROM DART AEROSPACE LTD.